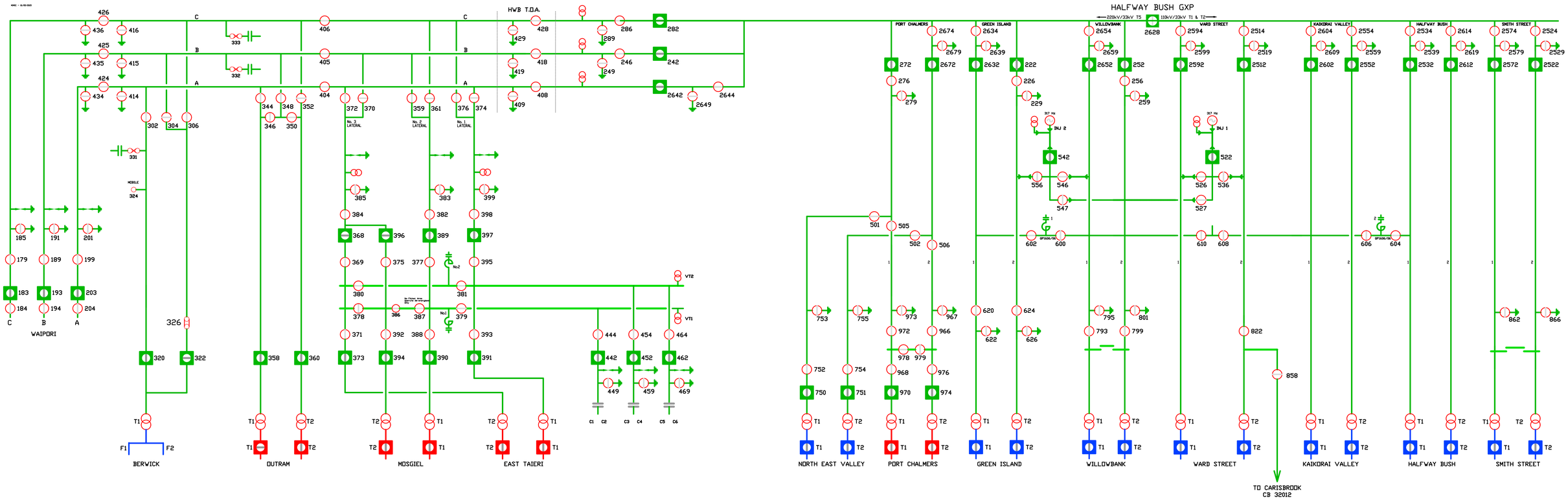
HALFWAY BUSH GXP
220kV/33kV T5
110kV/33kV T1 & T2
HWB T.O.A.
WAIPORI
BERWICK
OUTRAM
MOSGIEL
EAST TAIERI
NORTH EAST VALLEY
PORT CHALMERS
GREEN ISLAND
WILLOWBANK
WARD STREET
KAIKORAI VALLEY
HALFWAY BUSH
SMITH STREET
TO CARISBROOK
CB 32012

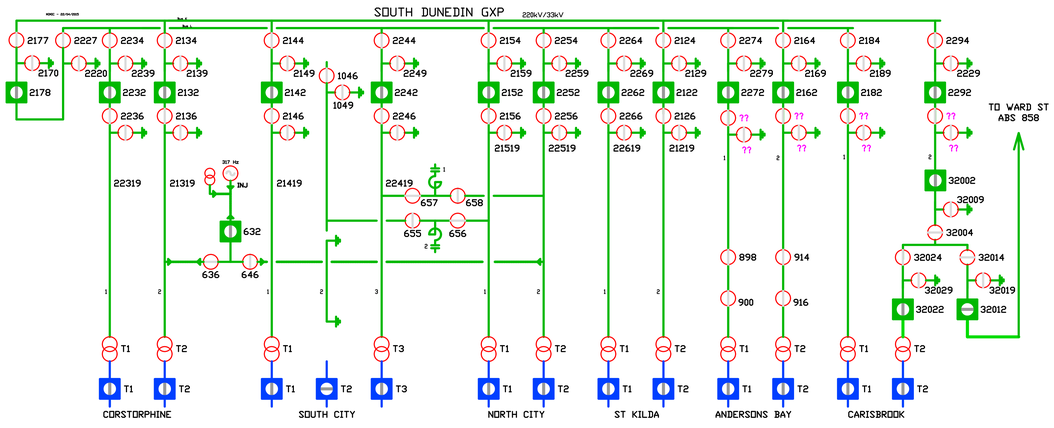
SOUTH DUNEDIN GXP
220kV/33kV
CORSTORPHINE
SOUTH CITY
NORTH CITY
ST KILDA
ANDERSONS BAY
CARISBROOK
TO WARD ST
ABS 858